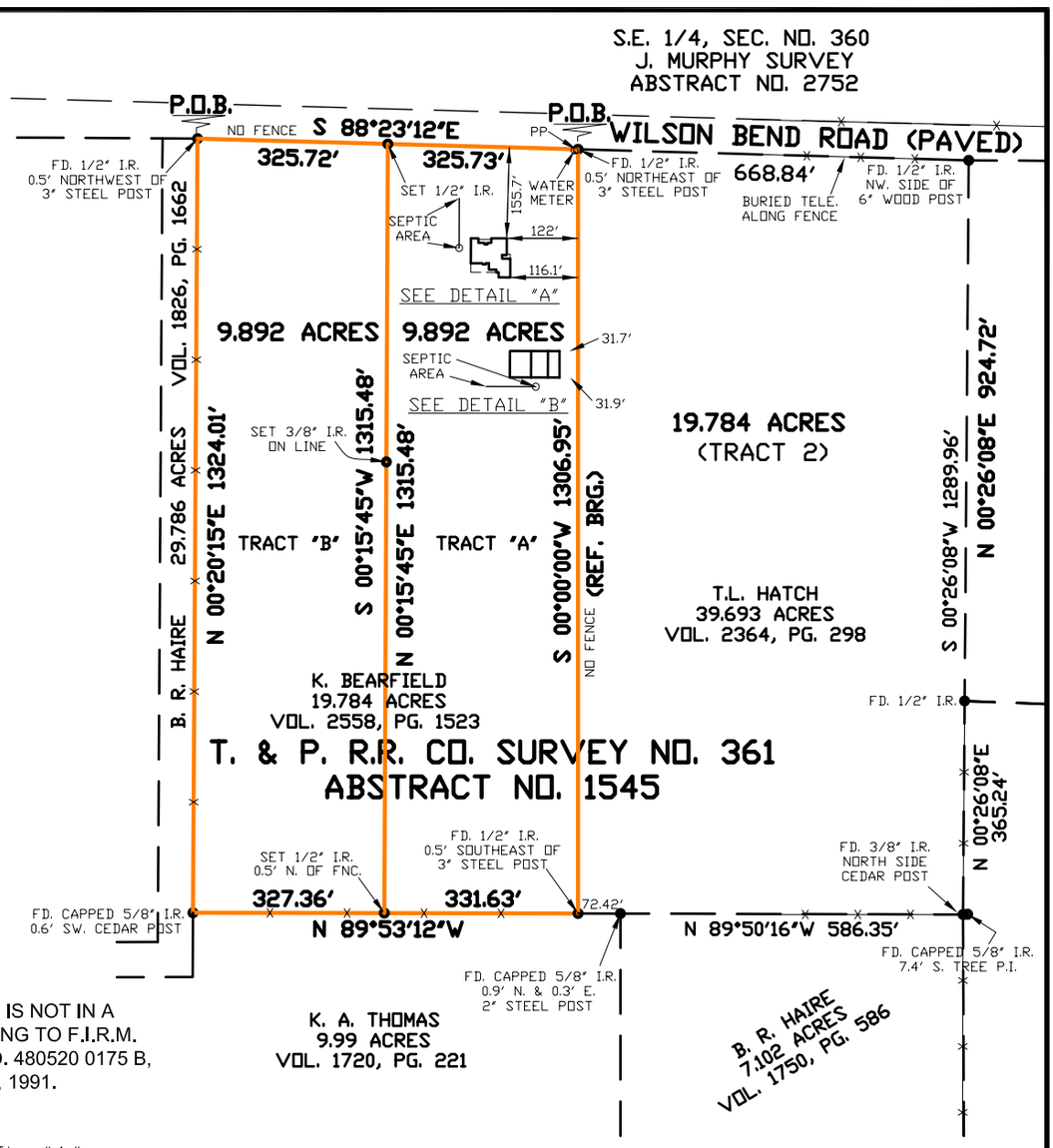

NOTE: THIS PROPERTY IS NOT IN A FLOOD ZONE ACCORDING TO F.I.R.M. COMMUNITY PANEL NO. 480520 0175 B, DATED SEPTEMBER 27, 1991.

DETAIL "A"

SCALE - 1" = 30'

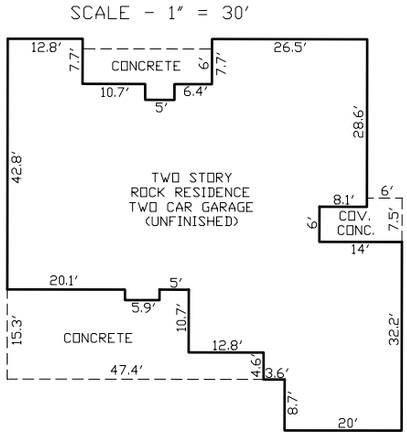

DETAIL "B"

SCALE - 1" = 30'

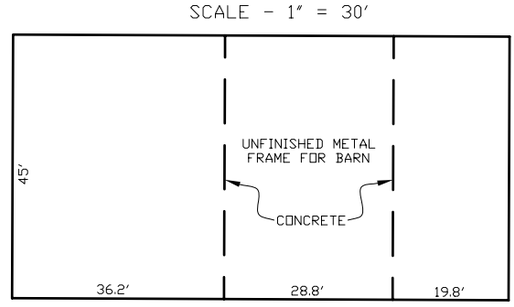

PLAT OF SURVEY & IMPROVEMENTS

OF A 9.982 ACRES TRACT (TRACT "A") OF LAND OUT OF T. & P. R.R. CO. SURVEY NO. 361, ABSTRACT NO. 1545, PARKER COUNTY, TEXAS.

OF A 9.982 ACRES TRACT (TRACT "B") OF LAND OUT OF T. & P. R.R. CO. SURVEY NO. 361, ABSTRACT NO. 1545, PARKER COUNTY, TEXAS.

CERTIFIED CORRECT AS SURVEYED ON THE GROUND
NO ENCROACHMENTS EXCEPT AS SHOWN: AUGUST 21, 2007

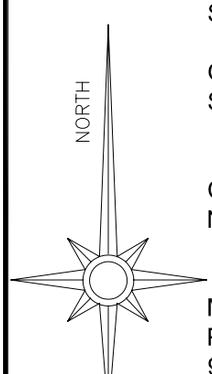
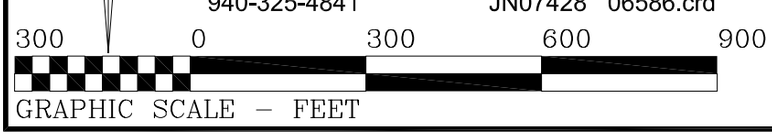
MICHAEL PRICE, REGISTERED PROFESSIONAL LAND SURVEYOR NO. 5492
PRICE SURVEYING, 213 SOUTH OAK AVENUE, MINERAL WELLS, TX 76067
940-325-4841 JN07428 06586.crd FN070823 FN070824