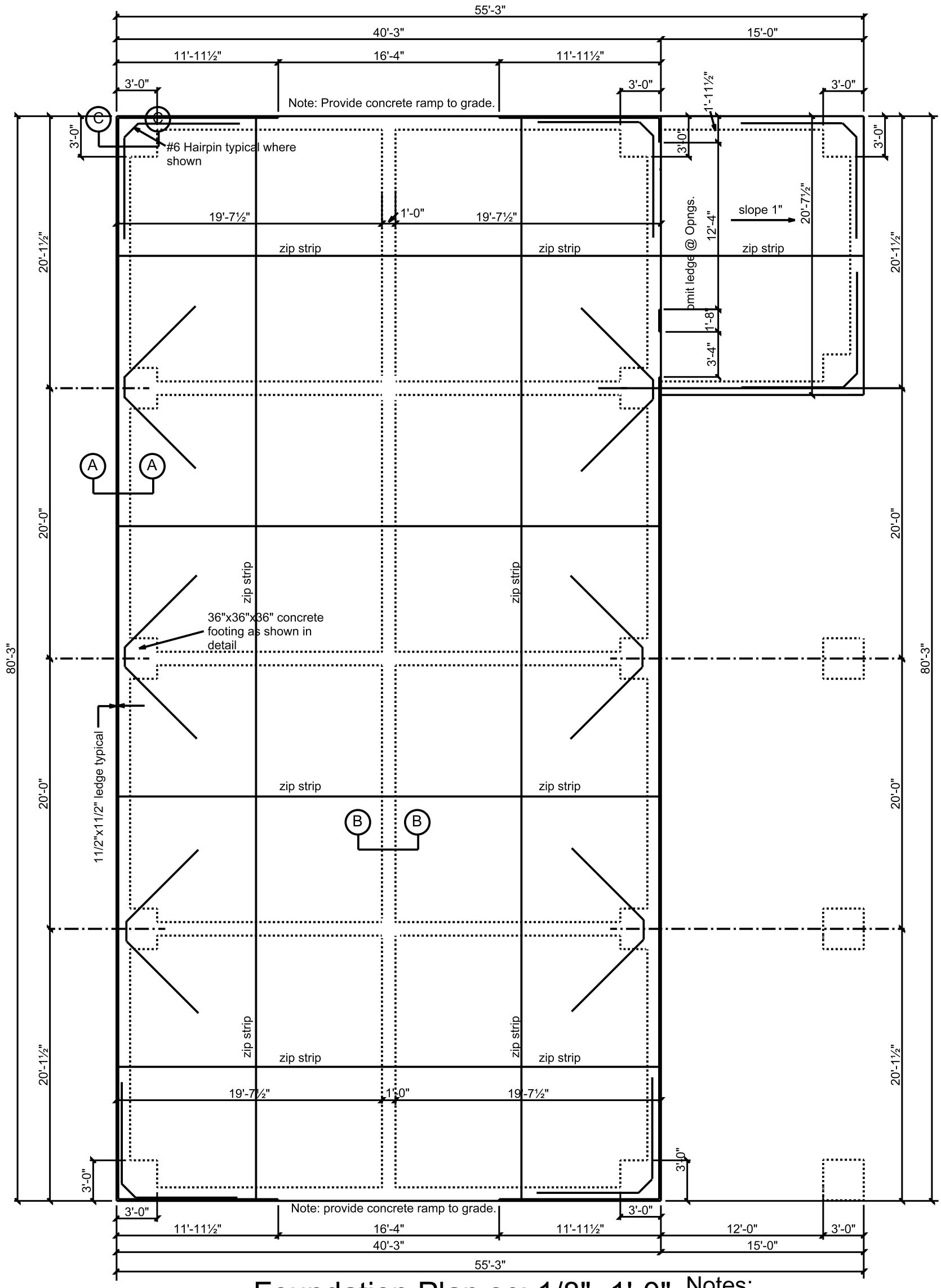

Foundation Plan sc: 1/8"=1'-0"

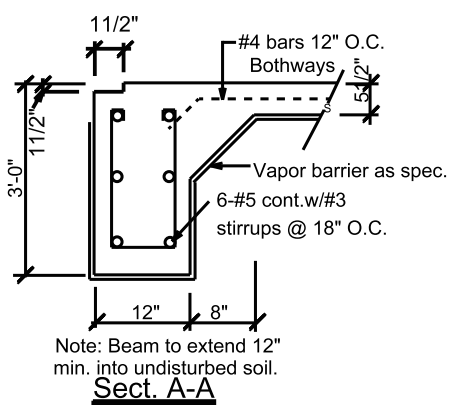

Sect. A-A

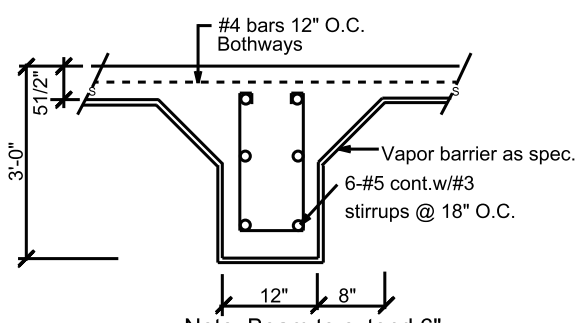

Sect. B-B

No scale

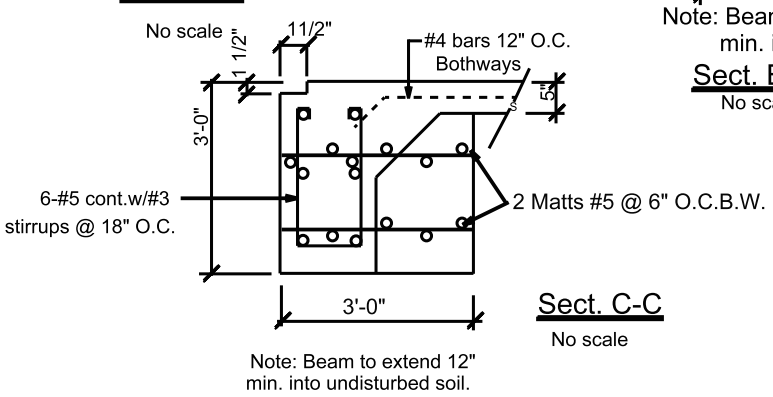

Sect. C-C

No scale

Notes:

1) Metal bldg. manfact. to furnish bolt setting plan.
2) Metal Bldg. manfact. to furnish engineering for Metal Bldg.

Design Standards:
1)Foundation design in accordance with the following:
A) Building code requirements for reinforced concrete, 318 American Building Institute.
2) Soils information furnishedby: none assumed differential swell, ym=1.0" & assumed max. PI=15%.

Materials:
1) Concrete shall have a minimum compression strength of 3,000 PSI @ 28 days. Calcium chloride or admixtures containing calcium chloride shall not be used as additives. Additional provisions for concrete shall conform to applicable requirements of ACI 302 " Recommended Practice for floor and slab construction".
2) Reinforcing bars shall conform to ASTM A-615 grade 60.
Welded Wire fabric shall conform to ASTM-185.

Construction
1) Site grading shall be performed in such a manner that surface or ground water will not collect under or adjacent to slab.
2) All fill under slabs shall be clayey sand having a PI of between 10& to 15% & placed in 8" max. layers & compacted to 95% standard proctor density.
3) All slabs shall have a 4" minimum cushion of granular select fill (clayey sand) having PI between 10% to 15%.
4) Forming, concrete placement, & curing shall conform to the requirements of ACI 302.

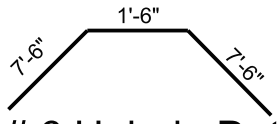

Typ. # 6 Hairpin Detail

No scale

Sht #2 of 5
Plan # 3,230
Valley Plans, Inc.
1516 Dove ave. ste. G
McAllen, Texas 78504
956-213-8115 6/28/2017